SIMAGIC
KEEP RACING

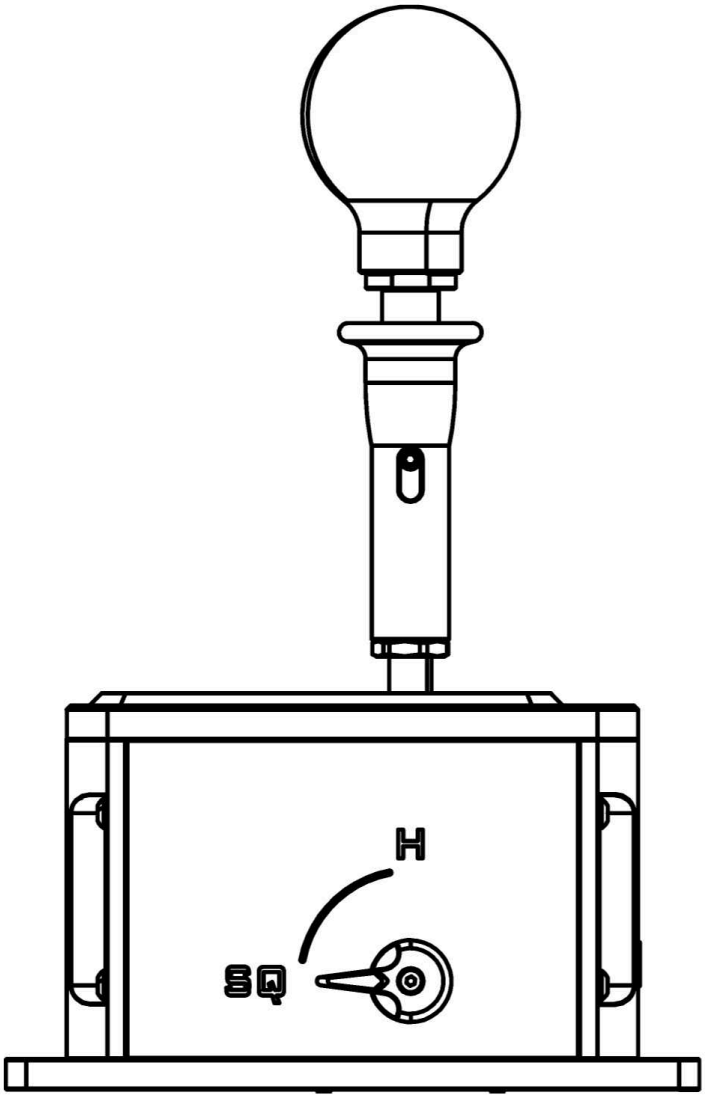

DS-8X

USER MANUAL

Contents

1. Introduction

1.1 Overview 03
1.2 Specifications 04
1.3 Package Contents 05
1.4 Optional Accessories 05
1.5 Certification Information 06

2. Instructions for Use

2.1 User Tutorial 06
2.2 Installation Guide 07

3. Software Support: SimPro Manager 11

4. Warranty Description 12

5. Safety Information 14

6. Contact Us 16

Thanks for choosing SIMAGIC. We can't wait to see you out on track. Before using your new DS-8X Shifter, please review this manual for essential information around installation, safe usage practices, and more.

KEEP RACING!

1.Introduction

1.1 Overview

Product Identification

Model: DS-8X

Serial Number (S/N): The SIMAGIC product serial number (S/N) is an essential credential for after-sales service and technical support. Please keep it properly for future reference. The S/N consists of 10 or 14 digits and is clearly printed and affixed to both the product packaging label and the product body.

Designed by: SHEN ZHEN SIMAGIC TECHNOLOGY CO.,LIMITED

Manufacturer: Speed sim industry (Shenzhen) Co. LTD

- **Address:** Building 10, DCC Cultural and Creative Park, South China City, Pinghu Street, Longgang District, Shenzhen, China
- **Email:** support@simagic.com

Contact Information within EU:

- **Address:** Bureau 450, 37 passage du Ponceau, Paris, France 75002
- **Tel:** +33-170613157
- **Email:** admin@mega-lages.com

MADE IN CHINA

Date of Manufacture: Please refer to the label on the product, packaging, or nameplate. Scan the serial number on the package for confirmation.

DS-8X Shifter
Hybrid H-Pattern / Sequential Shifter with 8 Gears.

- **Full Metal Construction:** CNC-machined aluminum with a reinforced steel core.
- **Dual Mode Switching:** Toggle between H-pattern and sequential with a single lever.
- **6+2+R+SQ Multiple Gears:** Clever layout to suit a variety of driving scenarios.8 forward gears and 1 reverse gear,complete with a pull-out gear lock that ensures that gears 7, 8,and R are not incorrectly engaged.
- **Convenient Strength Adjustment:** Adjustable strength, enhanced fatigue resistance for long-lasting elasticity.

- **Replaceable Gear Knobs:** Choose from multiple gear knobs to match your driving style.
- **Multiple Installation Methods:** Side mounting can be achieved with the optional L-plate bracket, sold separately.
- **Go Beyond DS-8X:** Plug and play via a Type-A USB socket,no driver software required,compatible with third-party gear knob replacements.

1.2 Specifications

	DS-8X
USB Connection	PC/SIMAGIC WheelBase
Adjustable Damping	Supported
RGB Buttons	Not Supported
Number of Gears	8F+1R
Side Mounting Brackets	Optional
Gear Knobs Replacement	Optional
Mounting Holes	M6 bolt with thread-hole x 4, M6 bolt with through-hole x 6
Building Material	Aluminum alloy
Diameter	170x102x264.5mm
Net Weight	2.0kg
Accessories	Installation Kit, USB Cable, Elastomer Kit

* Specifications subject to change without notice

1.3 Package Contents

DS-8X Shifter (Accessories) Includes:

- USB data cable x 1
- Tweezer x 1
- Installation Kit: (Button Head Socket Cap Screw M6-14 x 4/Roll in T-Nut with Ball Spring M6-40 x 4/Allen Key (4mm/6mm) X 1)

1.4 Optional Accessories

- P-LOK Multifunctional L-Shaped Bracket
- P-DFT Multifunctional Desk Fixture
- P-Q1-P Long Handle
- P-RSK Round Shift Knob
- P-TSK Tapered Shift Knob
- SIMAGIC Stickers for DIY

*Note：The accessorie above are optional and not included in the package

1.5 Certification Information

CE	The device is CE certified and meets the requirements of the European Union Directive 2014/53/EU on radio equipment.
RoHS	This device complies with the requirements for the restriction of hazardous substances (RoHS) in electrical and electronic equipment as stipulated in Directives 2011/65/EU and 2015/863. The content of hazardous substances including lead, mercury, cadmium, hexavalent chromium, polybrominated biphenyls (PBBs), polybrominated diphenyl ethers (PBDEs) and four phthalates in its homogeneous materials is below the statutory limit values.
REACH	The device complies with the requirements of Regulation (EC) No. 1907/2006 concerning Registration, Evaluation, Authorization and Restriction of Chemicals (REACH).

2.Instructions for Use

2.1 User Tutorial

Thank you for purchasing the SIMAGIC DS-8X Shifter. Before setting up the product, carefully read all the documentation that came with the package.

- For information about firmware upgrades, please check https://simagic.com/pages/download-center

* The related files are game adaptation files developed by SIMAGIC for SIMAGIC-compatible devices. To safeguard users' legal rights and interests, please download all files through SIMAGIC's designated channels.

- Please visit SIMAGIC official YouTube channel (https://www.youtube.com/@simagicofficial6890) for tutorial videos showcasing different product setup options and usage techniques. Learn more about the development behind our products.
- Please visit https://simagic.com/pages/telemetry-support to access the list of games supported by this product. Note that using this product in non-supported games may result in certain functions not working as intended.


This product is intended for indoor use only.



Recommended ages: 15 and above 

2.2 Installation Guide

This section provides instructions for setting up and initializing your product.

*Please avoid using the product without proper mounting, as they may shift during operation and could potentially cause injury.

2.2.1 DS-8X Shifter Mounting Method

1. Installation Method

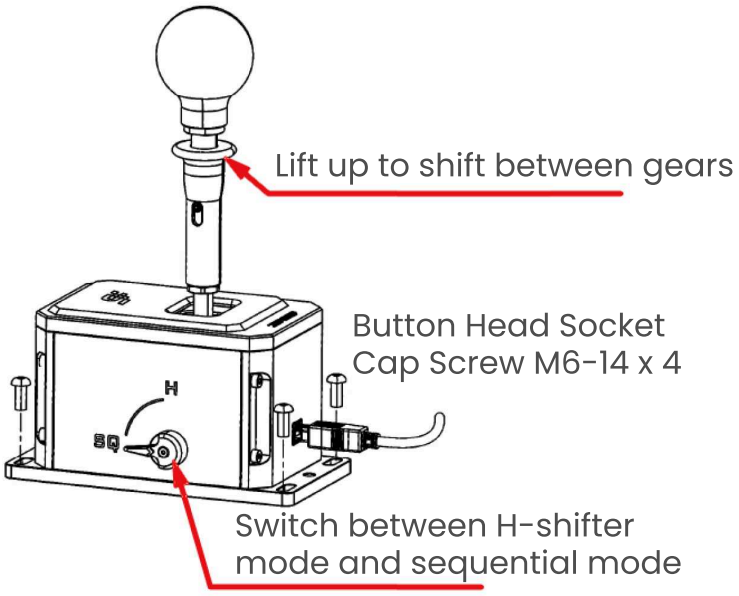

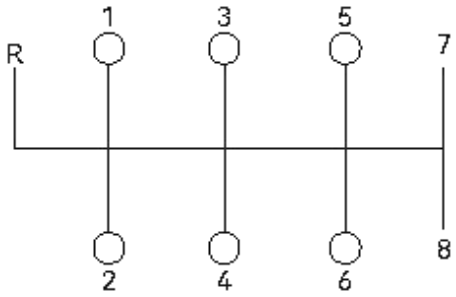

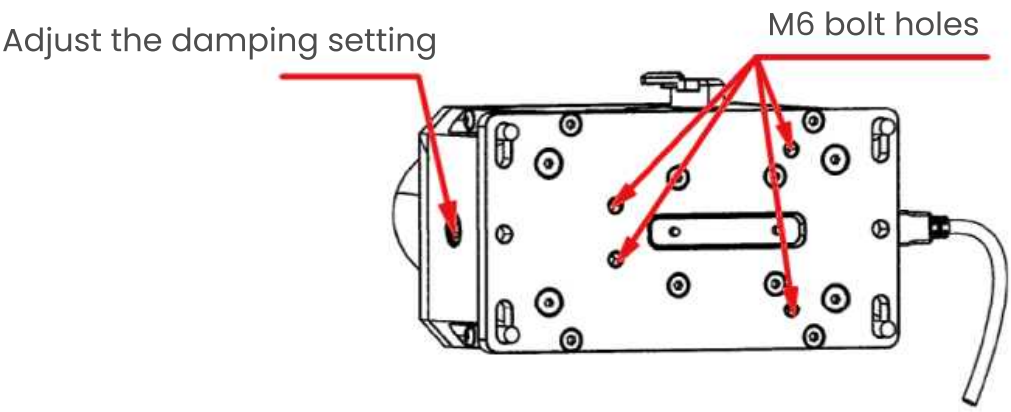

2. Install the P-DFT on a DS-8X Shifter

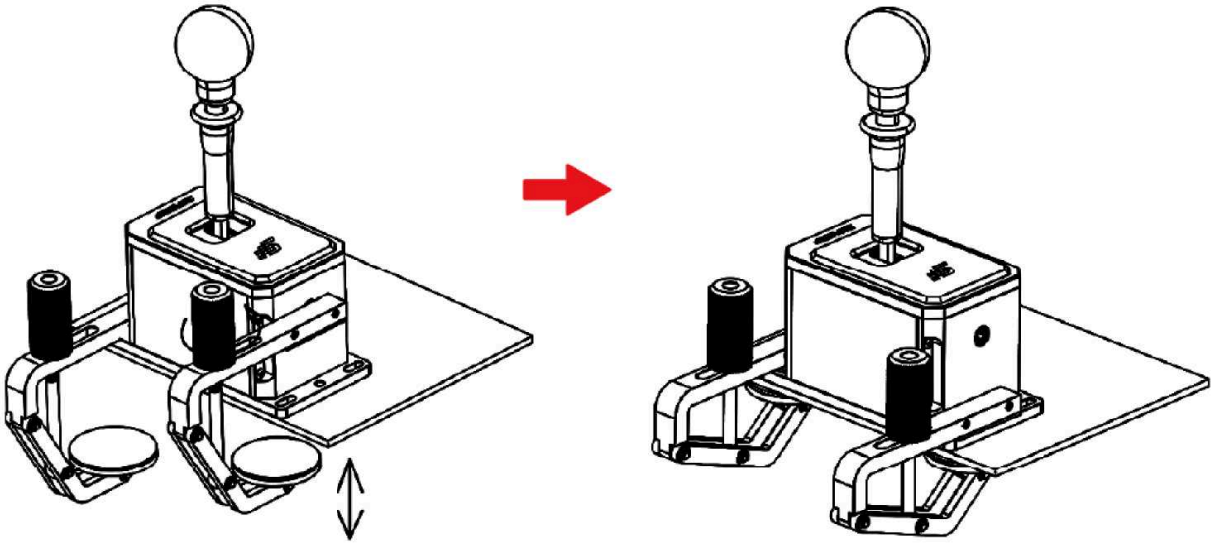

3. Install the P-LOK on a DS-8X Shifter

M6 bolt mounting hole sizes should not exceed 20mm.

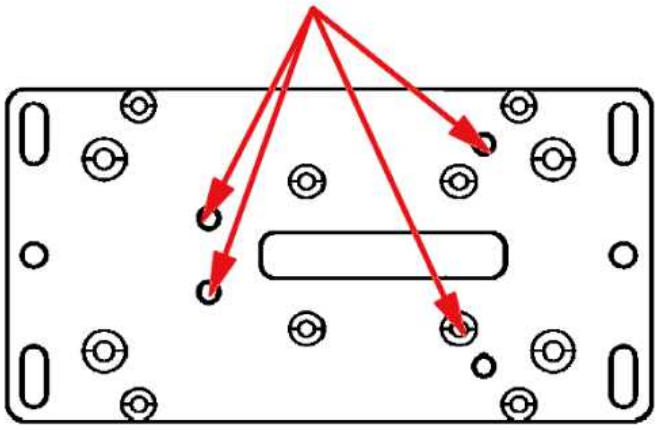

Mounting Method ①

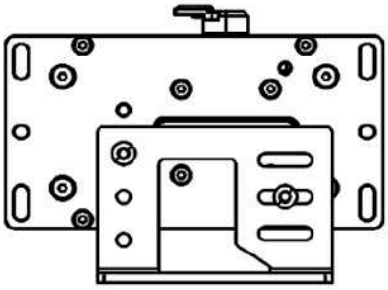

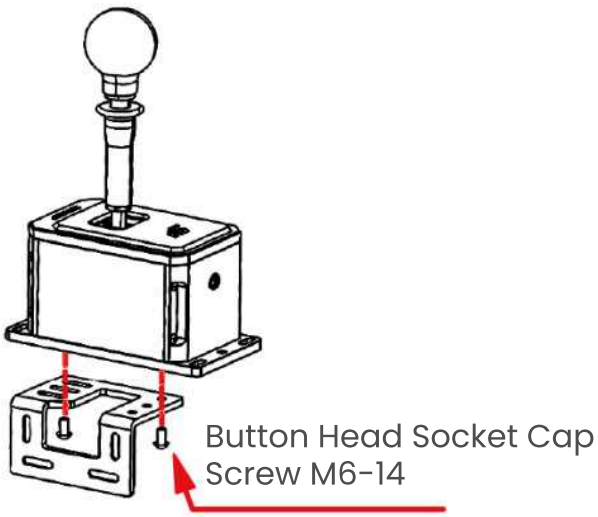

Mounting Method ②

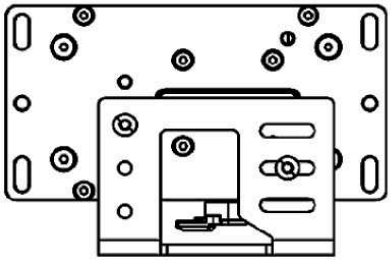

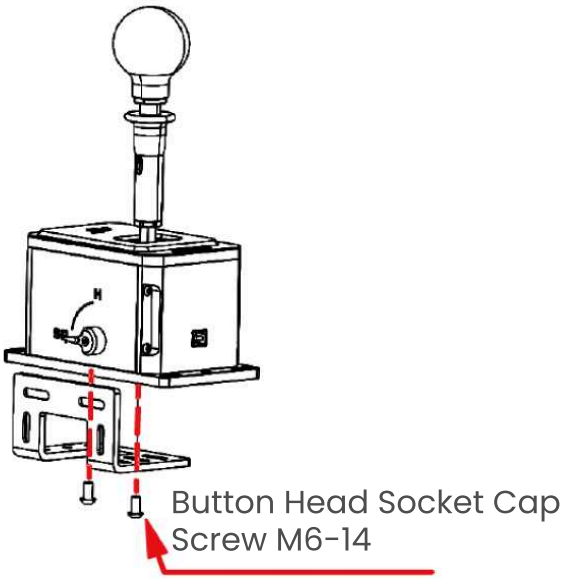

2.2.2 DS-8X Shifter Dimensions

DS-8X

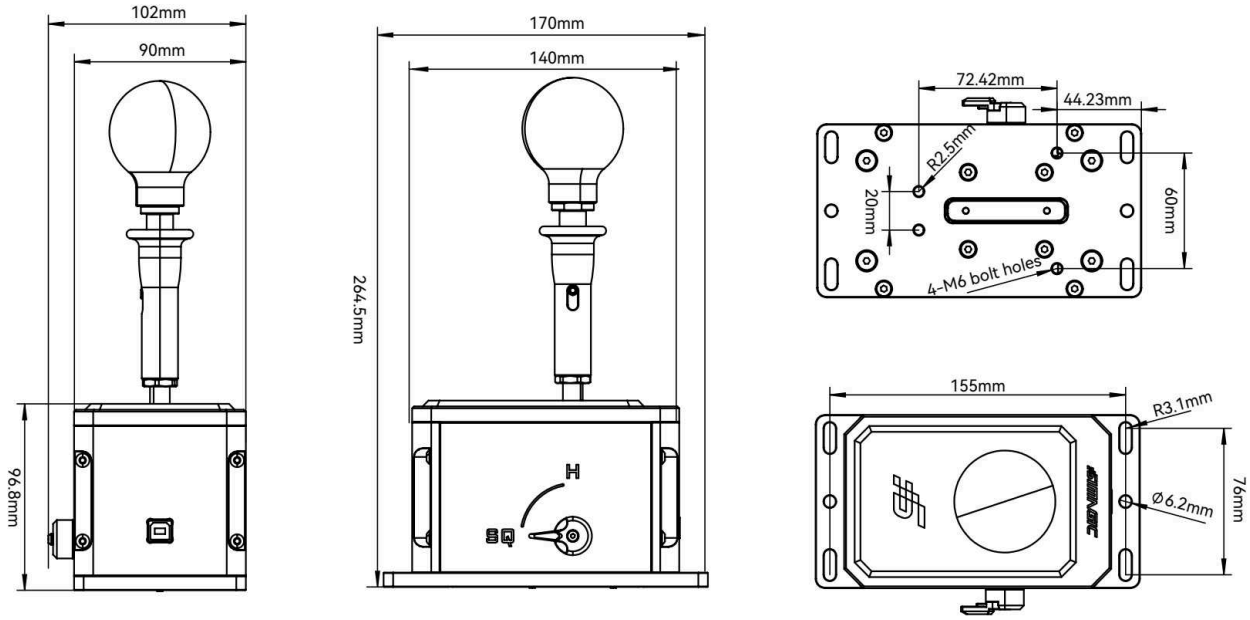

3. Software Support: SimPro Manager

SimPro Manager will automatically notify you if there are available updates for the software. If you want to double-check, please go to https://simagic.com/pages/download-center and download the newest version. SimPro Manager has a built-in feature that allows you to update the firmware on your devices automatically.

Scan QR Code

4. Warranty Description

Warranty Terms

The warranty period is 12 months from the date of purchase. During the warranty period, if there are issues with the machine's components, materials, or craftsmanship under normal use and maintenance, and the problem is confirmed after inspection, the company will provide free repairs and replacement parts.

SIMAGIC product's Serial Number (S/N) will serve as the primary identifier for after-sales support. You can locate the S/N on the product packaging and the product itself, attached via a sticker on the product surface. Simply provide the 10 or 14-digit S/N to our customer service team or SIMAGIC distributor when applying for after-sales service, and they will assist you promptly. For users who have products with serial numbers, there's no need for warranty cards. However, if your product does not have a serial number, you will need to retain your warranty card for after-sales support.



Your product's serial number can be found on the label sticker of wrapping

*Consumer Law. This Limited Warranty gives you specific legal rights, and you may have other rights that vary by your country, province or state, as applicable. Other than as permitted by law, SIMAGIC does not exclude, limit or suspend other rights you may have. For a full understanding of your rights, you should consult the laws of your country, province or state, as applicable.

SIMAGIC establishes dealer terms and consumer product warranty terms, requiring official partners such as dealers and agents to provide consumers with standardized SIMAGIC warranty services to safeguard consumers' legal rights.

SIMAGIC adheres to a service spirit that is responsible for users and ensures user confidence, striving to create the ultimate user experience. Regarding these warranty terms, if adjustments are necessary, we regret that specific notifications may not be provided.

Please refer to the latest content released through official channels such as the official website. Please avoid causing damage to the machine intentionally. Do not deviate from the guidance of official or officially authorized personnel when performing non-normal hardware or system operations on the machine. For detailed usage instructions, please visit https://simagic.com/pages/product-tutorial .

Disclaimer

The Limited Warranty does not apply to any:
a) Failure to provide proof of purchase for the product or an order number, or if there is reason to believe that they have been forged or altered.
b) The warranty claim is made in a country or customs area other than where the product was originally purchased.
c) Damage caused to the product by disassembly or modification of its structure without written authorization from SIMAGIC.
d) Products purchased from a retailer other than SIMAGIC's official online store.
e) Cosmetic damage, including but not limited to scratches, dents, and plastic damage at ports, unless the damage is caused by defects in materials or workmanship.
f) Damage caused by not adhering to SIMAGIC's product usage and operation specifications, or by modifying or disassembling the product.
g) Damage caused by using third-party components or products that do not meet the specifications of SIMAGIC's hardware products.
h) Defects caused by normal wear and tear or normal aging of the product.
i) The serial number on SIMAGIC's product has been removed or altered.
j) If SIMAGIC receives information from relevant authorities that the product has been stolen, and the user cannot prove in any way that they are the authorized user of the product.
k) Damage caused by accidents, lightning strikes, corrosion, fire, liquid contact, earthquakes, or other external causes.

5. Safety Information

In order to achieve maximum safety while using your products, We suggest that you adopt the following guidelines:

* Storage and Operating Conditions:

Operating Temperature	0°C~40°C
Humidity	20% – 80% RH, Non-Condensing.
Storage and Usage	For indoor use only. Avoid direct sunlight. If the device is moved from a cold outdoor environment indoors, leave it unused for 2 hours to allow condensation to dissipate before powering on.

This product is designed to operate under the conditions specified above. Operating outside these conditions may cause certain functions to malfunction or affect overall performance.
Before using the product, ensure it has adjusted to the recommended indoor temperature if it was exposed to extreme heat or cold.

⚠ This product is intended for sim racing only.
⚠ Should you have trouble using the product properly and troubleshooting does not work, unplug the power and go to your local distributor for support. Do not attempt to service or fix the product yourself at any time.
⚠ To prevent fire or shock hazard, never expose the products to rain or moisture.
⚠ Only use the power and/or accessories included in the package, and/or purchase accessories made and/or approved by the manufacturer.
⚠ Use only a standard AC wall outlet with protective grounding to avoid product damage or electric shock.
⚠ When terminating use, please turn off the buttons and power equipment to prevent accidents.
⚠ Unplug the unit during a lightning storm or if it will not be used for a long period of time.
⚠ This device contains no user-serviceable parts. Disassembly may result in a risk of electric shock. Do not take apart the phone (doing so will void your warranty), component replacements must be carried out or authorized by SIMAGIC's official repair center.

When using the simulator, please pay attention to the following:

- ⚠ This product is not intended for use by children under 14 years of age.
- ⚠ First-time users or those experiencing the device should be guided by the device owner.
- ⚠ This product operates with a high-torque direct-drive motor. Keep limbs, hair, loose clothing, cables, and accessories away from rotating parts (quick-release mechanism) during operation. Strong force feedback may cause serious crushing injuries, muscle damage, or fractures.
- ⚠ Kill Switch is a legally required safety device. Before starting any driving simulation, ensure that the Kill Switch is connected and placed within the operator's reach. Under no circumstances, if control of the device is lost, should you delay pressing the Kill Switch.
- ⚠ Users with a history of epilepsy, heart disease, or who have a pacemaker should consult a qualified physician before using this device. Certain patterns may trigger seizures with no prior history. If you experience any symptoms, please stop using the product immediately and consult a doctor.
- ⚠ When using a high-torque base, the peak force feedback may cause hand injuries. If the feedback is too strong, release your hands immediately and adjust the feedback intensity parameters promptly to prevent potential accidents.
- ⚠ The equipment contains moving parts, pinch points, and sharp edges that may cause personal injury. Operate with caution to prevent pinching, bruising, kicking, smashing, or other bodily injuries.
- ⚠ It is recommended to limit the force feedback gaming time from 20 to 40 mins to avoid health risks from excessive use.
- ⚠ Users should refrain from driving a real car for at least 1 hour after finishing the game.
- ⚠ If any abnormalities are detected, stop using the device immediately and seek assistance from SIMAGIC's official or authorized service center.
- ⚠ Please follow SIMAGIC's official website and public platforms for the latest product information.

6. Contact Us



Discord



Youtube



Instagram



Facebook

SIMAGIC official website: https://simagic.com/
Global social media account name: simagic official

Copyright © 2025 SIMAGIC Tech Co.Ltd. All Rights Reserved.

The products and corporate names mentioned in this manual may or may not be registered trademarks or copyrights of their respective companies. They are used solely for the purposes of identification or explanation, and to the benefit of the owners, without any intention of infringement.

The specifications and information provided in this manual are intended for informational purposes only and are subject to change at any time without notice. They should not be interpreted as a commitment by SIMAGIC. SIMAGIC assumes no responsibility or liability for any errors or inaccuracies that may appear in this manual, including those related to the products and software described within it.

SIMAGIC shall not be liable for any lost profits, loss of information or data, special, incidental, indirect, punitive, or consequential damages arising in any way out of the distribution, sale, resale, use, or inability to use the Product. In no event shall SIMAGIC's liability exceed the retail purchase price of the Product.